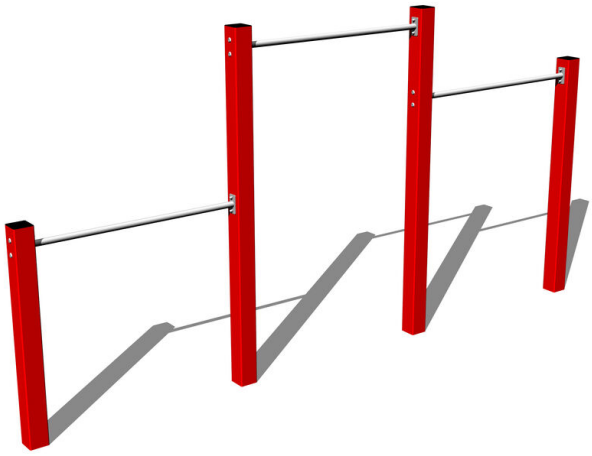

Triple fitness rack HR301KR - red (f.h. 1,5 m)

Product type HR-301KR-15

Basic information

Age category	3 - 15 years
Minimum area	7 m x 3,5 m
Equipment measurements	3,7 m x 0,1 m x 1,91 m
Free fall height:	1,9 m
Load capacity:	162 kg
Max. number of users:	3
Fall zone: EN 1177	Rubber or gravel, 24,5 m^2
Designation:	exterior
Availability of spare parts:	supplied by the
Certificate of Compliance:	ČSN EN 1176 - 1

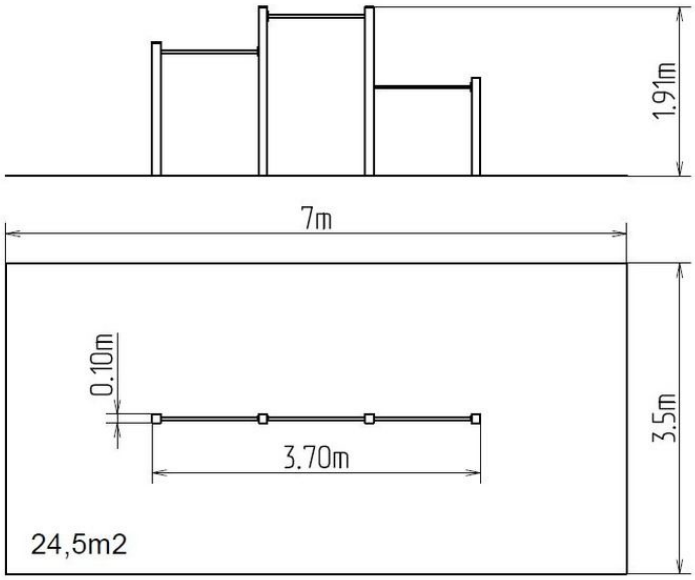

Material

Metal units - structural steel

Finish

Duplex powder coated with coat curing
Hot-dip galvanizing

Description

The support structure of the triple fitness rack is made of structural steel which is protected against corrosion by zinc coating, resulting in a very prolonged service life of the workout elements or duplex powder coated with coat curing according to RAL to prevent corrosion and is fixed in a concrete bed. All other metallic elements are also zinc coated or duplex powder coated with coat curing according to RAL to prevent corrosion. The triple fitness rack is constructed with durability and long life in mind. All fastening material is galvanized or stainless steel.

Equipment

We offer three color variants of the support structure - red, blue and brown.

We reserve the right to change products without prior notice, which will, from our point of view, improve quality. The pictures are only informative and the products shown may differ from the products that we currently supply. We also reserve the right to make printing errors and assume no responsibility for their possible consequences. Otherwise, our terms and conditions apply.