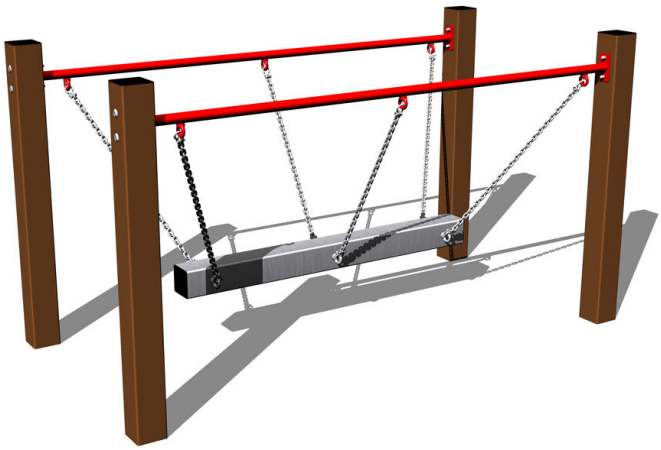

Chain bridge RL101KW - brown (f.h. 1 m)

Product type RL-101KW-10

Basic information

Age category	3 - 15 years
Minimum area	5 m x 4 m
Equipment measurements	2 m x 1 m x 1,12 m
Free fall height:	0,4 m
Load capacity:	54 kg
Max. number of users:	1
Fall zone: EN 1177	Grass surface
Designation:	exterior
Availability of spare parts:	supplied by the
Certificate of Compliance:	ČSN EN 1176 - 1

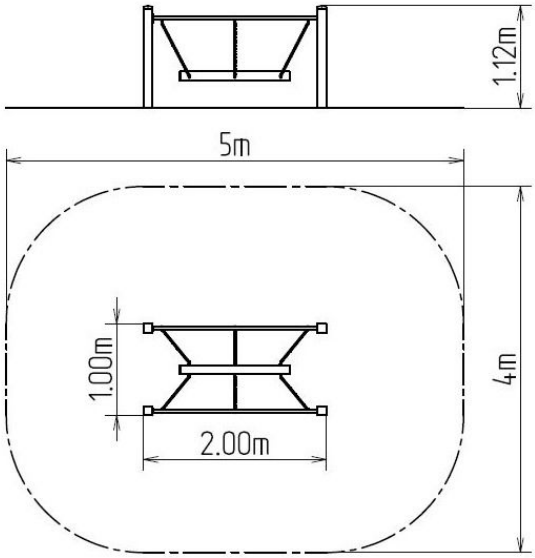

Material

Metal units - structural steel

Finish

Duplex powder coated with coat curing
Hot-dip galvanizing

Description

The support structure of the rope bridge is made from structural steel, it is zinc coated or duplex powder coated with coat curing according to RAL to prevent corrosion. The structure is fixed in a concrete bed. All other metal units are zinc coated or duplex powder coated with coat curing according to RAL to prevent corrosion. The wobbly beam is hung on a metal support using galvanized chains. All fastening material is galvanized or stainless steel.

Equipment

We offer three color variants of the support structure - red, blue and brown.

We reserve the right to change products without prior notice, which will, from our point of view, improve quality. The pictures are only informative and the products shown may differ from the products that we currently supply. We also reserve the right to make printing errors and assume no responsibility for their possible consequences. Otherwise, our terms and conditions apply.