Category

Fitness machine

www.playgrounds-bonita.com

Fitness element FP-004SL Shoulder workout machine - lime

Product type FP-004SL-10

Basic information

Age category	from 15 years
Minimum area	4,18 m x 3,8 m
Equipment measurements	1,2 m x 0,8 m x 1,94 m
Free fall height:	1.0 m
Load capacity:	120 kg
Max. number of users:	1
Fall zone: EN 1177	Grass surface
Designation:	exterior
Availability of spare parts:	supplied by the
Certificate of Compliance:	ČSN EN 16630:2016

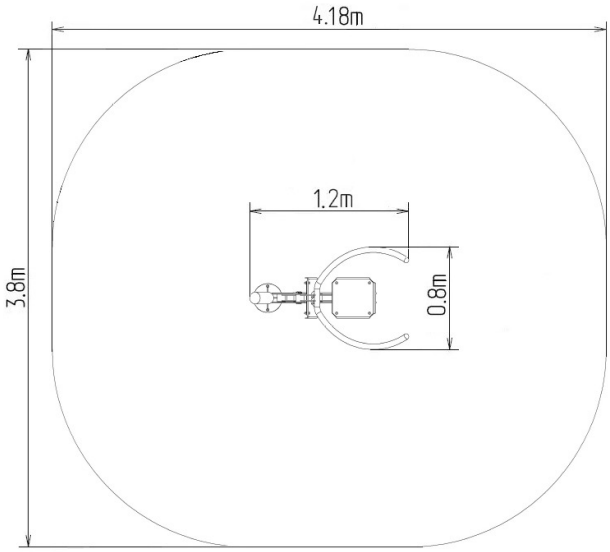

Material

Supporting column, handles - made of steel tubes
Seat and backrest - HDPE

Finish

Komaxit powder coating
Hot-dip galvanizing

Description

Seat and backrest are made of aluminum and covered with HDPE polyethylene (high-pressure, full-colored polyethylene, which is characterized by high color stability, UV resistance). The handles are made of powder-coated steel tubes. The supporting column is made of a steel tube with a mounting flange at the bottom. The seat frame and tread are made of powder coated sheet metal. Rolling bearings are used for movable connections. Holes are sealed with steel elements at the ends. All fasteners are stainless.
Functions: It improves the strength of the upper part of the body. It works out the back and shoulder muscles and biceps, while increasing flexibility and improving the cardiovascular functions.
Instructions: Sit down on the seat and grasp the handles firmly above yourselves. Drag the handles towards your chest. Return to the original position.

We reserve the right to change products without prior notice, which will, from our point of view, improve quality. The pictures are only informative and the products shown may differ from the products that we currently supply. We also reserve the right to make printing errors and assume no responsibility for their possible consequences. Otherwise, our terms and conditions apply.