Category

Fitness machine

www.playgrounds-bonita.com

Fitness element FP-022ST Tai-chi - turquoise

Product type FP-022ST-10

Basic information

Age category	from 15 years
Minimum area	4,05 m x 3,8 m
Equipment measurements	1,05 m x 0,8 m x 1,71 m
Free fall height:	1.0 m
Load capacity:	120 kg
Max. number of users:	1
Fall zone: EN 1177	Grass surface
Designation:	exterior
Availability of spare parts:	supplied by the
Certificate of Compliance:	ČSN EN 16630:2016

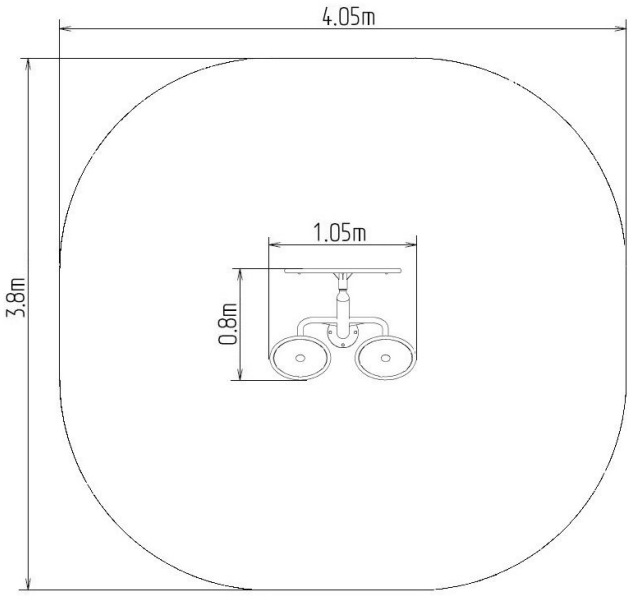

Material

Supporting column, handles - made of steel tubes

Finish

Duplex powder coated with coat curing
Hot-dip galvanizing

Description

The wheels are made of powder-coated steel tubes. The supporting column is made of a steel tube with a mounting flange at the bottom. Holes are sealed with steel elements at the ends. All fasteners are stainless.
Functions: It trains muscles of arms and shoulders. It improves the cardiovascular functions and flexibility of muscles and ligaments of the upper part of the body.
Instructions: Place your palms on the surface of the turning wheel and move with them as if you were drawing circles. Perform the movement in one and the other direction.

We reserve the right to change products without prior notice, which will, from our point of view, improve quality. The pictures are only informative and the products shown may differ from the products that we currently supply. We also reserve the right to make printing errors and assume no responsibility for their possible consequences. Otherwise, our terms and conditions apply.