www.playgrounds-bonita.com

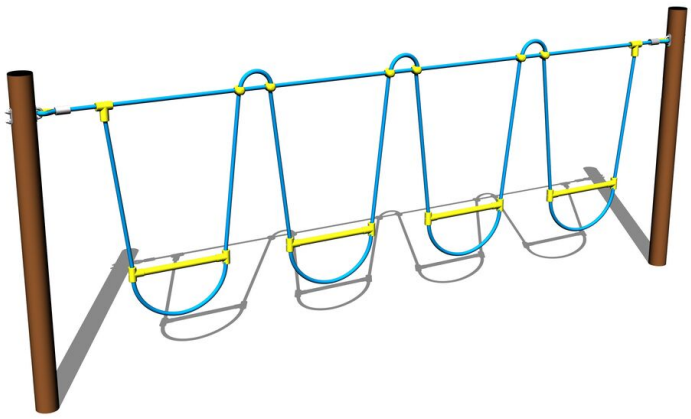

Rope weave LP080KW - brown

Product type LP-080KW-10

Basic information

Age category	2 - 10 years
Minimum area	6,3 m x 3,1 m
Equipment measurements	3,3 m x 0,09 m x 1,3 m
Free fall height:	1 m
Load capacity:	216 kg
Max. number of users:	4
Fall zone: EN 1177	Grass surface
Designation:	exterior
Availability of spare parts:	supplied by the
Certificate of Compliance:	ČSN EN 1176 - 1, 11

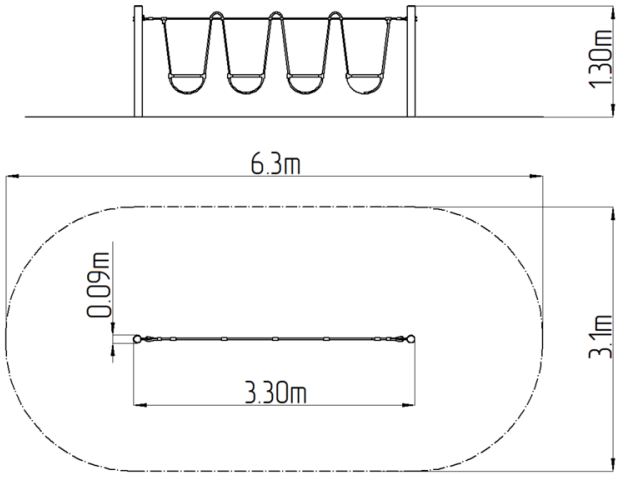

Material

Metal units - structural steel
Ropes and nets - polypropylene with a steel internal core
Plastic units - polyamide

Finish

Duplex powder coated with coat curing
Hot-dip galvanizing

Description

The support structures of the rope unit are made from structural steel with a diameter of 89 mm, they are zinc coated or duplex powder coated with coat curing according to RAL to prevent corrosion and fixed in a concrete bed. The ropes are made using HERKULES material (16 mm thick ropes made from polypropylene with a steel internal core) and are connected with plastic joints. All fastening material is galvanized or stainless steel.

Equipment

We offer three color variants of the support structure - red, blue and brown.

We reserve the right to change products without prior notice, which will, from our point of view, improve quality. The pictures are only informative and the products shown may differ from the products that we currently supply. We also reserve the right to make printing errors and assume no responsibility for their possible consequences. Otherwise, our terms and conditions apply.