Category

Playground » Chain swings » 6-seat swings

www.playgrounds-bonita.com

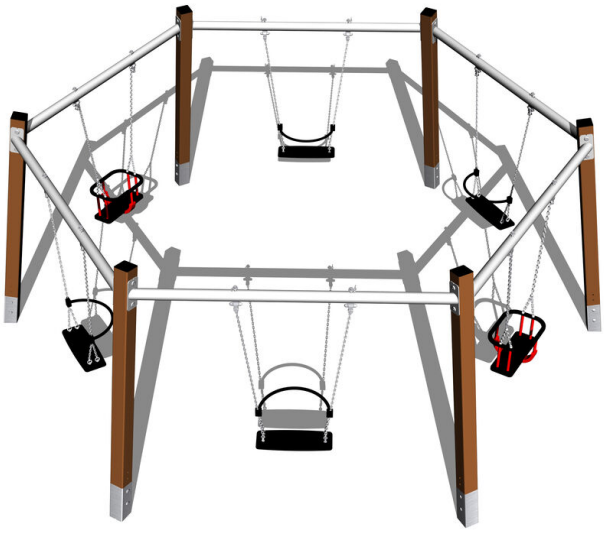

Chain group six swing RH610KW - Brown (f.h. 1,0 m)

Product type RH-610KW-10

Basic information

Age category	2 - 15 years
Minimum area	6,82 m x 7,41 m
Equipment measurements	4 m x 4,55 m x 1,8 m
Free fall height:	1.0 m
Load capacity:	324 kg
Max. number of users:	6
Fall zone: EN 1177	Grass surface
Designation:	exterior
Availability of spare parts:	supplied by the
Certificate of Compliance:	ČSN EN 1176 - 1, 2

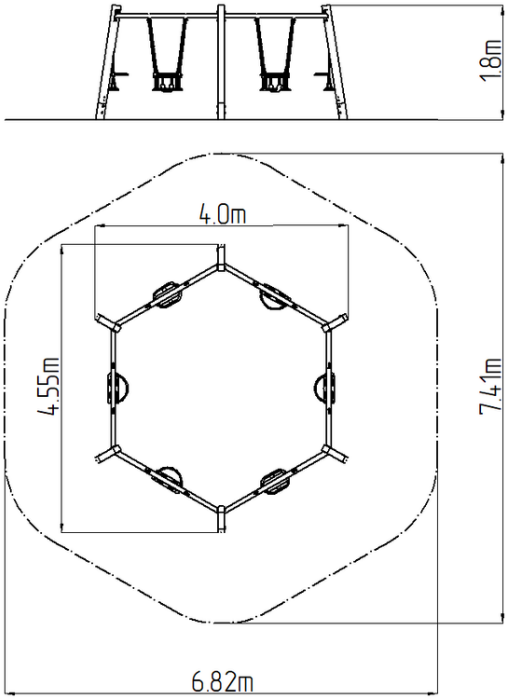

Material

Metal parts - structural steel
Normal seat - aluminum, covered with rubber
Baby seat - rubber with aluminum insert

Finish

Duplex powder coated with coat curing
Hot-dip galvanizing

Description

The support structure of the swing is made from structural steel, which is zinc coated or duplex powder coated with coat curing according to RAL to prevent corrosion. The structures are anchored into the ground in steel plates, which are protected against corrosion by hot-dip galvanizing a and fixed in a concrete bed. The anchors are fastened to the play unit with bolts and their structure ensures that they are not in direct contact with the ground.
The seat is made of rubber and is reinforced with an aluminum insert. The Normal seat is made of aluminum, covered with a soft and comfortable rubber. The chains are stainless steel, resulting in a very prolonged service life of the product. All fastening material is galvanized or stainless steel.

Equipment

6x metal beam (galvanized), 4x Normal seat, 2x Baby seat.We offer three color variants of the support structure - red, blue and brown.

We reserve the right to change products without prior notice, which will, from our point of view, improve quality. The pictures are only informative and the products shown may differ from the products that we currently supply. We also reserve the right to make printing errors and assume no responsibility for their possible consequences. Otherwise, our terms and conditions apply.