www.playgrounds-bonita.com

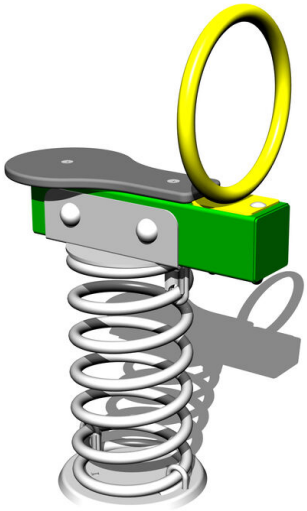

Single seat seesaw on spring VH101KG - green

Product type VH-101KG-10

Basic information

Age category	2 - 10 years
Minimum area	3,5 m x 2,3 m
Equipment measurements	0,49 m x 0,29 m x 0,83 m
Free fall height:	1 m
Load capacity:	54 kg
Max. number of users:	1
Fall zone: EN 1177	Grass surface
Designation:	exterior
Availability of spare parts:	supplied by the
Certificate of Compliance:	ČSN EN 1176 - 1, 6

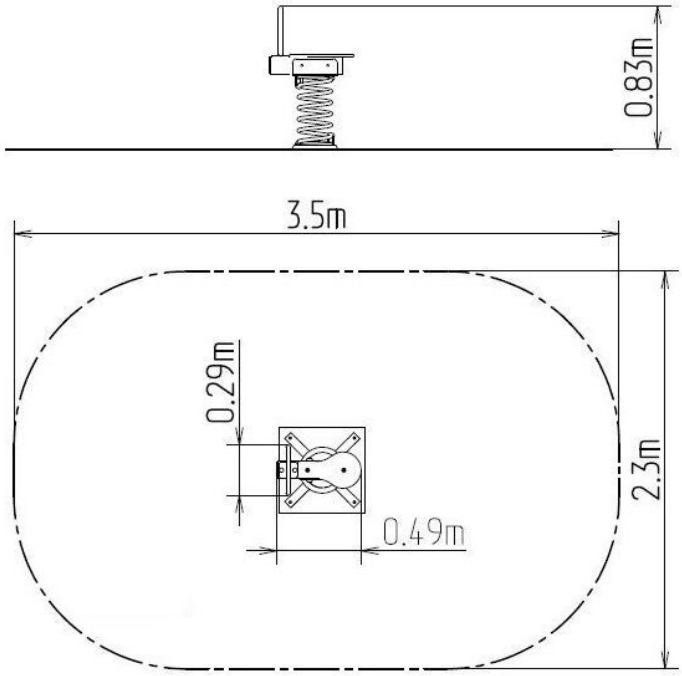

Material

Metal units - structural steel
Seats - HPL
Spring - special spring steel

Finish

Duplex powder coated with coat curing
Hot-dip galvanizing

Description

The seesaw beam is made from structural steel, which is zinc coated or duplex powder coated with coat curing according to RAL to prevent corrosion and is secured to the support spring. The spring is made from special spring steel and are duplex powder coated with coat curing according to RAL to prevent corrosion.
The seats are made from HPL (High-pressure laminate, which is characterised by high colour stability and water resistance).
The handles are zinc coated or duplex powder coated with coat curing according to RAL to prevent corrosion. The swing is constructed with durability and long life in mind. Impacts are dampened by rubber bumpers. All fastening material is galvanized or stainless steel.

We reserve the right to change products without prior notice, which will, from our point of view, improve quality. The pictures are only informative and the products shown may differ from the products that we currently supply. We also reserve the right to make printing errors and assume no responsibility for their possible consequences. Otherwise, our terms and conditions apply.