www.playgrounds-bonita.com

Double seat seesaw VH210KY - yellow

Product type VH-210KY-10

Basic information

Age category	2 - 10 years
Minimum area	6,1 m x 2,3 m
Equipment measurements	3,08 m x 0,23 m x 0,95 m
Free fall height:	1 m
Load capacity:	108 kg
Max. number of users:	2
Fall zone: EN 1177	Grass surface
Designation:	exterior
Availability of spare parts:	supplied by the
Certificate of Compliance:	ČSN EN 1176 - 1, 6

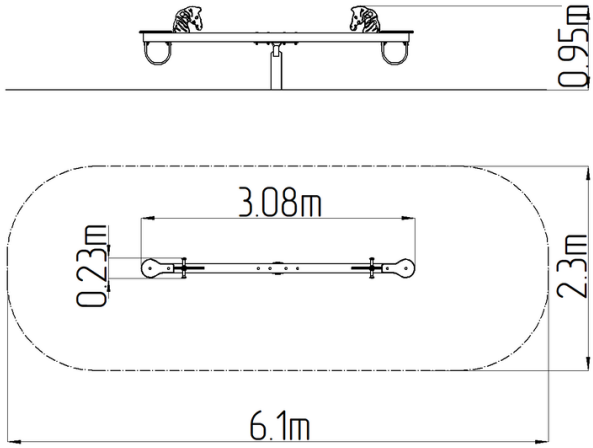

Material

Metal units - structural steel
Seats - HPL
Plastic units - HDPE

Finish

Duplex powder coated with coat curing
Hot-dip galvanizing

Description

The seesaw beam is made from structural steel, which is zinc coated or duplex powder coated with coat curing according to RAL to prevent corrosion and is anchored to the support structure by carriage bolts. The support structure of the see-saw is steel; it is protected against corrosion by hot-dip galvanizing and fixed in a concrete bed.
Plastic units are made from high quality HDPE plastic (high density coloured polyethylene, which is characterised by high colour stability, UV resistance but mainly safety as it doesn't break and therefore there is no danger of injury to children by sharp fragments).
The seats are made from HPL (High-pressure laminate, which is characterised by high colour stability and water resistance).
All fastening material is galvanized or stainless steel. The swing is constructed with durability and long life in mind. Impacts are dampened by rubber bumpers.

We reserve the right to change products without prior notice, which will, from our point of view, improve quality. The pictures are only informative and the products shown may differ from the products that we currently supply. We also reserve the right to make printing errors and assume no responsibility for their possible consequences. Otherwise, our terms and conditions apply.