Category
Workout

www.playgrounds-bonita.com



Street workout set - anthracite-red

Product type WS-8016AR-15

Basic information

Age category	Not specified
Minimum area	6,92 m x 5,43 m
Equipment measurements	3,92 m x 2,43 m x 2,51 m
Free fall height:	1,5 m
Max. number of users:	5
Fall zone: EN 1177	Grass surface
Certificate of Compliance:	ČSN EN 16630

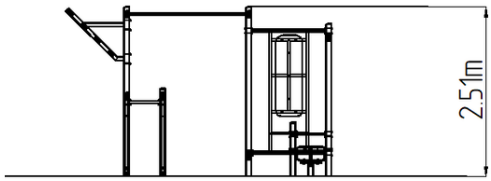

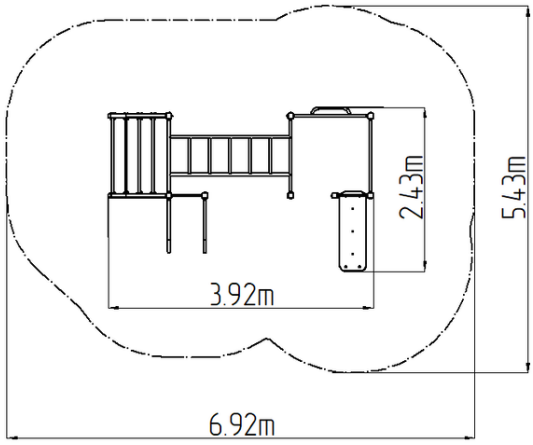

Material

Metal units - structural steel
Plastic units - HDPE

Finish

Duplex powder coated with coat curing
Hot-dip galvanizing

Description

The supporting structure is made of galvanized structural steel and then powder coated, and all other metal parts are made of black structural steel, sandblasted, duplex sprayed with powder coated.
All bench boards and steps are made of high quality HDPE (full-coloured high-density polyethylene, which is characterised by high colour stability, UV resistance and mainly safety because it is rigid and there is no risk of injury caused by sharp broken fragments). All connecting material is zinc or stainless steel coated.

Equipment

Color variants: blue-black, red-black, yellow-black, green-black, grey-black, orange-black.

We reserve the right to change products without prior notice, which will, from our point of view, improve quality. The pictures are only informative and the products shown may differ from the products that we currently supply. We also reserve the right to make printing errors and assume no responsibility for their possible consequences. Otherwise, our terms and conditions apply.