www.playgrounds-bonita.com

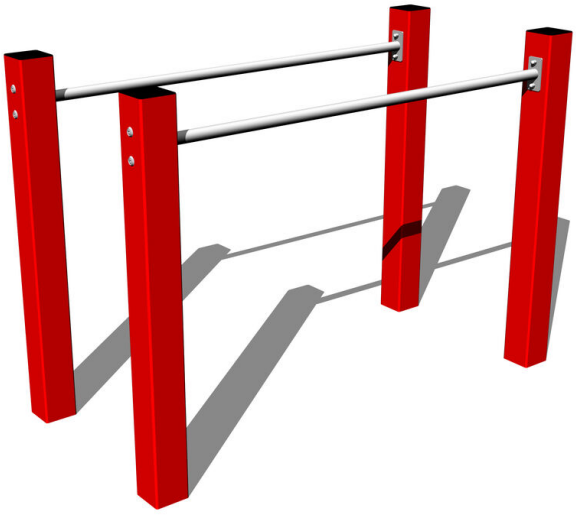

Parallel bars BR101KR - red (f.h. 1 m)

Product type BR-101KR-10

Basic information

Age category	3 - 15 years
Minimum area	4,5 m x 3,7 m
Equipment measurements	1,5 m x 0,7 m x 1,11 m
Free fall height:	1 m
Load capacity:	54 kg
Max. number of users:	1
Fall zone: EN 1177	Grass surface
Designation:	exterior
Availability of spare parts:	supplied by the
Certificate of Compliance:	ČSN EN 1176 - 1

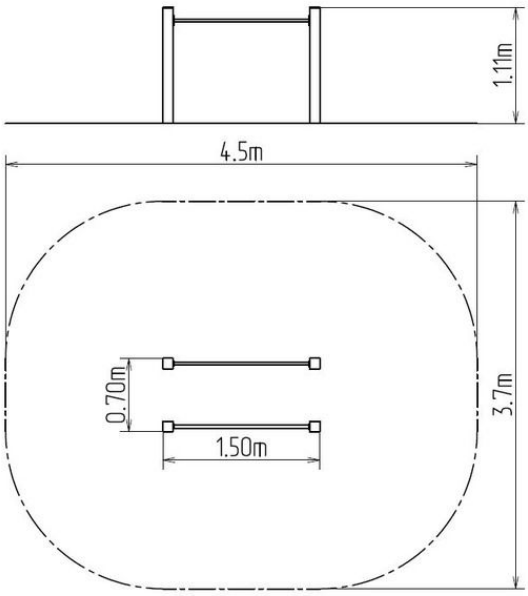

Material

Metal units - structural steel

Finish

Komaxit powder coating
Hot-dip galvanizing

Description

The parallel bar support structure is made from structural steel which is protected against corrosion by zinc coating, resulting in a very prolonged service life of the workout elements, and coating with baked paint KOMAXIT according to the RAL colour system. The bars are 70 cm apart, they are metal, protected by zinc coated and treated with baked paint KOMAXIT according to the RAL colour system. The parallel bars are constructed with durability and long life in mind. All fastening material is galvanized or stainless steel.

Equipment

We offer three color variants of the support structure - red, blue and brown.

We reserve the right to change products without prior notice, which will, from our point of view, improve quality. The pictures are only informative and the products shown may differ from the products that we currently supply. We also reserve the right to make printing errors and assume no responsibility for their possible consequences. Otherwise, our terms and conditions apply.