www.playgrounds-bonita.com

Spring rocker - PONY HP203K

Product type HP-203K-10

Basic information

Age category	2 - 10 years
Minimum area	3,9 m x 3,3 m
Equipment measurements	0,84 m x 0,24 m x 0,91 m
Free fall height:	0,5 m
Load capacity:	54 kg
Max. number of users:	1
Fall zone: EN 1177	Grass surface
Designation:	exterior
Availability of spare parts:	supplied by the
Certificate of Compliance:	ČSN EN 1176 - 1, 6

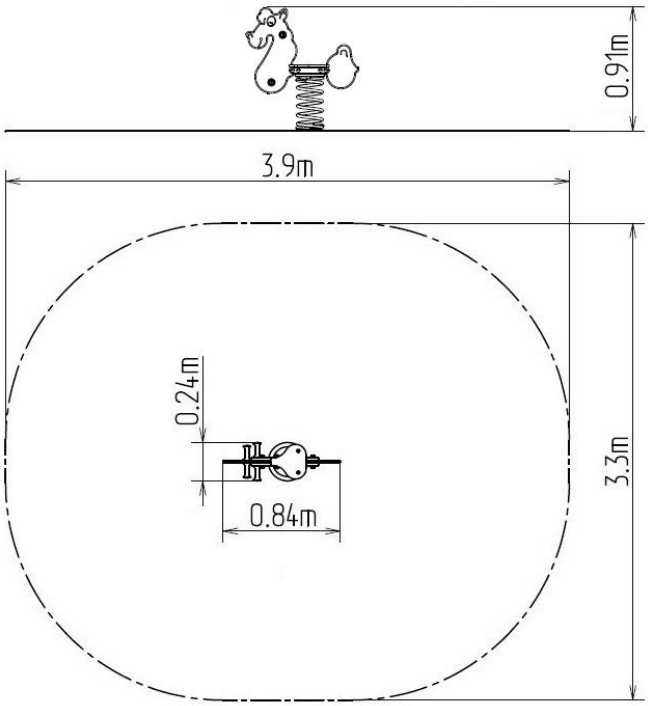

Material

Plastic parts - HDPE
Metal parts - stainless steel
Swing spring - special spring steel

Finish

Komaxit powder coating
Hot-dip galvanizing

Description

The body of the rocker and the seat are made from high quality HDPE plastic (high density coloured polyethylene, which is characterised by high colour stability, UV resistance but mainly safety as it doesn't break and therefore there is no danger of injury to children by sharp fragments). The swing spring is made from special spring steel and is KOMAXIT powder coated. All fastening material is galvanized or stainless steel.

We reserve the right to change products without prior notice, which will, from our point of view, improve quality. The pictures are only informative and the products shown may differ from the products that we currently supply. We also reserve the right to make printing errors and assume no responsibility for their possible consequences. Otherwise, our terms and conditions apply.