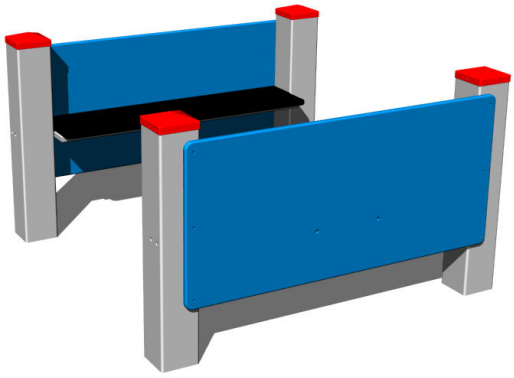

Wagon VA100KS-Q - silver (Coastal region)

Product type VA-100KS-10-Q

Basic information

Age category	0 - 10 years
Minimum area	4 m x 4,1 m
Equipment measurements	1 m x 1,03 m x 0,62 m
Free fall height:	1 m
Load capacity:	162 kg
Max. number of users:	3
Fall zone: EN 1177	Grass surface
Designation:	exterior
Availability of spare parts:	supplied by the
Certificate of Compliance:	ČSN EN 1176 - 1

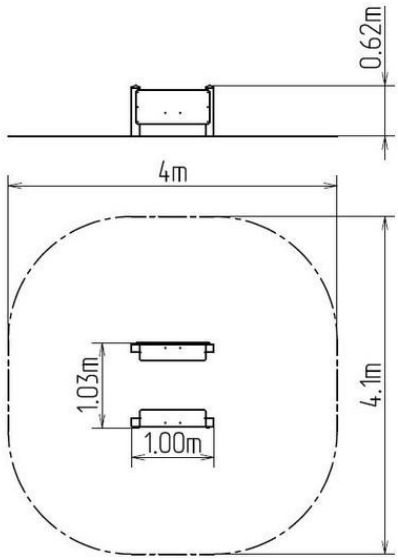

Material

Metal units - structural steel
Benches - HPL
Plastic units - HDPE

Finish

Komaxit powder coating
Hot-dip galvanizing

Description

<style fontName="Roboto" isBold="false" isItalic="false" size="21" forecolor="#29265E" backcolor="#FFFFFF">The support structure of the double wagon is made of structural steel (metal profile 100 x 100 mm) which is protected against corrosion by zinc coating, resulting in a very prolonged service life of the workout elements, and coating with baked paint KOMAXIT according to the RAL colour system. These structures are anchored to concrete footings. All other metallic elements are also zinc coated and treated with baked paint KOMAXIT according to the RAL colour system.</style>
The Benches are made from HPL (High-pressure laminate). <style fontName="&quot" isBold="false" isItalic="false" forecolor="#29265E" backcolor="#FFFFFF">All other parts of the play unit are made from high quality HDPE plastic (high density coloured polyethylene, which is characterised by high colour stability, UV resistance but mainly safety as it doesn't break and therefore there is no danger of injury to children by sharp fragments). All fastening material is galvanized or stainless steel. </style>

Equipment

2x side wall, 2x bench.

We reserve the right to change products without prior notice, which will, from our point of view, improve quality. The pictures are only informative and the products shown may differ from the products that we currently supply. We also reserve the right to make printing errors and assume no responsibility for their possible consequences. Otherwise, our terms and conditions apply.